MAGNI
TELESCOPIC HANDLERS

ROUGH TERRAIN FORKLIFTS

FL 3,0

PRELIMINARY

CONSTRUCTION

LOGISTIC

Model Identification	Model name	FL3,0
	Load Capacity - with STD WVM3,0	3,000 kg
	Load center	500 mm
	Power source	Diesel
	Distance from the center of the front axle to the fork deck	600 mm
Weight	Weight	5,890 kg
	Weight on front axle (laden) / rear axle (laden)	5,080/810 kg
	Weight on front axle (unladen) / rear axle (unladen)	2,610/3,280 kg
Wheels	Tyres type	Pneumatic
	Tyres brand	Exmile
	Dimensions of front wheels	14-17.5-14PR
	Dimensions of rear wheels	10,0/75-15,3
	Number of wheels drive	4WD - 2X /2X
Stage V engine	Model name ID	FL3,0-K/V
	Engine brand and model	KUBOTA V2607-CR-TE5B
	Engine cylinders/displacement	4/2615
	Rated speed	2,400 rpm
	Engine emission stage	Stage V
	Kw/(hp)	47.3 kW (63hp)
Performances	Travel speed (laden/unladen)	23/25 km/h
	Lifting speed (laden/unladen)	0.38/0.41 m/s
	Lowering speed (laden/unladen)	0.4/0.45 m/s
	Drawbar pull (laden)	4,700 daN
	Gradeability (laden)	58 %
	Transmission model	4F35S
	Transmission type	Hydraulic - 3-speed Powershift
	Axles type	Wet braking
	Differential with automatic locking function	Electric differential lock by manual
	Service brake	Hydraulic
	Park brake	Mechanical
	Battery	12 V
Others	Working hydraulic pressure for attachments	185 bar
	Oil flow rate for attachments	80 l/min
	Noise level Lwa dB(A) guaranteed	101 dB(A)

FULL COSTUMIZATION POTENTIAL

You can get max comfort even in extreme environments! Choose from a full list of options for your forklift from the sound-absorbing panel to the closed cab.

Get the best efficiency and versatility for your workday.

FULLY CLOSED CAB AVAILABLE AS AN OPTION

Customize your machine with a fully enclosed cabin, full-height doors, and an optional air conditioning and heating system for ultimate operator comfort and flexibility.

DIMENSIONS

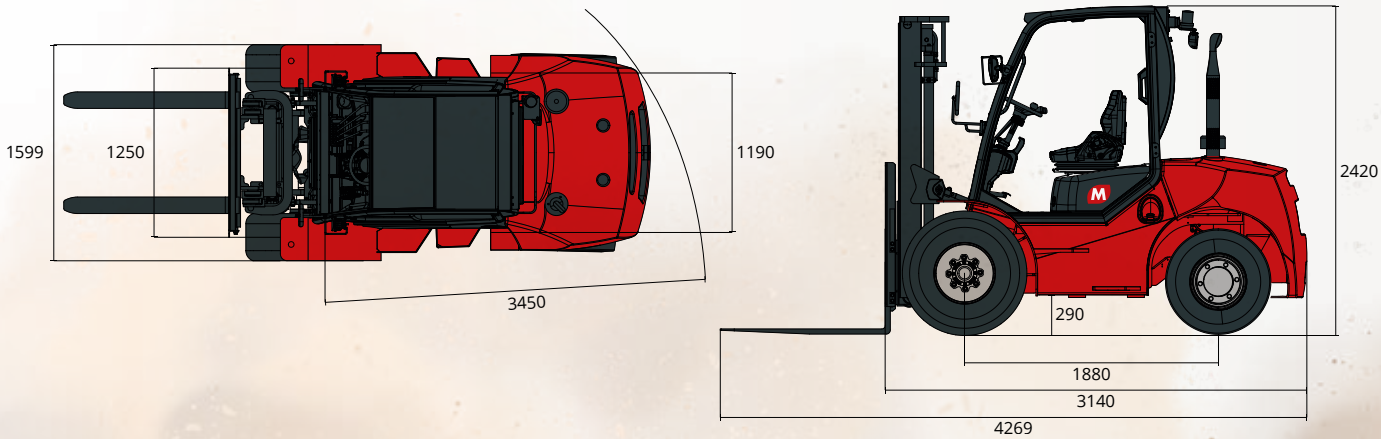

EXCEPTIONAL
OFF-ROAD TRACTION

EXCELLENT
MANEUVERABILITY

ROBUST
AND DURABLE MATERIALS

GREAT
LOAD CAPACITY & LIFTING HEIGHT

MASTS

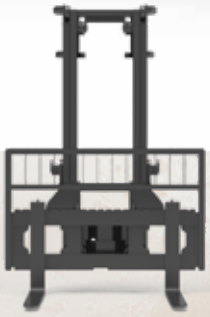

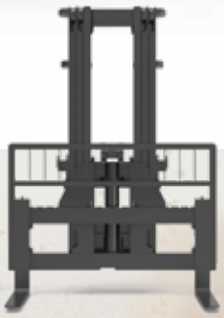

Type		Wide View			Triplex				
Model		**M-FL-1001**	**M-FL-1002**	**M-FL-1003**	**M-FL-1004**	**M-FL-1005**	**M-FL-1006**	**M-FL-1007**	**M-FL-1008**
Configuration		std	opt	opt	opt	opt	opt	opt	opt
Max. lifting height (mm)		3,000	3,700	4,000	4,000	4,300	4,500	4,700	5,000
Max. height (mm)	Lowered height	2,350	2,700	2,950	2,300	2,400	2,450	2,550	2,700
	Extended height without load backrest	3,993	4,693	4,993	5,025	5,325	5,525	5,725	6,025
Free lift height (mm)	Without load backrest	150	150	150	1,031	1,131	1,181	1,281	1,431
Front overhang (mm)		600	600	600	618	618	618	618	618
Tilting angle	Front	10	10	10	10	10	10	10	6
	Rear	12	12	12	12	12	12	12	6
Load Capacity (kg) 500 mm load center	ISO 22915-2	3,000	3,000	3,000	2,900	2,700	2,500	2,300	2,100
	ISO 22915-13	3,000	2,600	2,400	2,300	2,100	1,900	1,500	1,200

With Cascade fork positioner -300Kg on load capacity.

With Cascade sideshifter and fork positioner -500Kg on load capacity

FEATURES FL 3,0

Open cabin (front & rear windshield)
Front & rear wipers
Road lights front and rear
LED front working light
Blue light
Flashing amber beacon light
Right & left rear view mirrors
Panoramic spherical mirror
4 valve and piping
Tie-down rings
Suspended seat
Seat belt interlock system predisposition (OPS needed if required)
Comfort armrest
4-inch color LCD screen
On board diagnostic system
Emergency stop button inside of the cabin
Manual parking brake
Hourmeter
Back-up buzzer

OPTIONS FL 3,0

Closed cabin
Heater
Air conditioning
Noise insulating pad
Super elastic tyre (replace standard tyres)
Front solid tyres
No marking tyres
European standard7-core waterproof socket
5th additional hose
5th additional valve
Sparkle arrestor
Additional lockable main power switch inside of the cab
Operator presence system (OPT) with alarm - CE 2023
Operator presence system with engine inhibition - mandatory for Australia
Customized painting
Predisposition for road registration
Fleet management - CANBUS plug predisposition

FULL RANGE

FL 2,5

FL 3,0

FL 3,5

FL 5,0